KNEEBOARD 5FIN LAYOUT

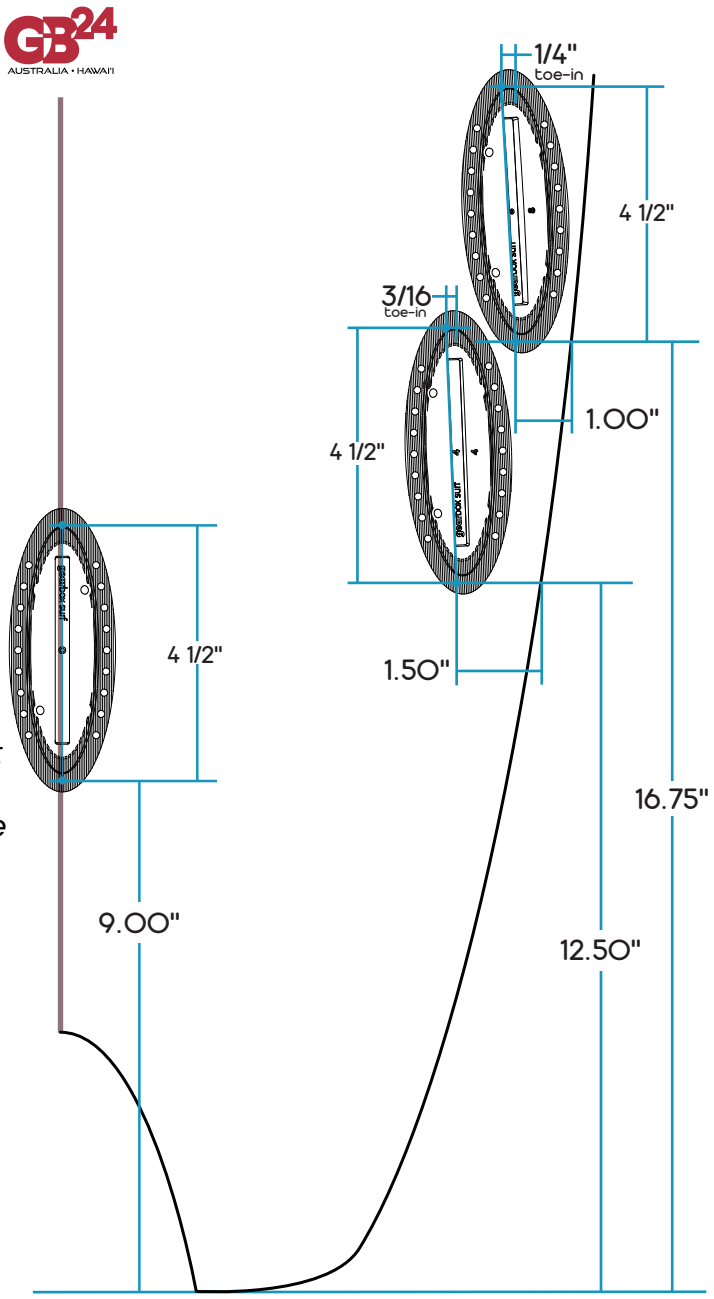

NOTE: *if this layout is used with different boxes the back boxes might be able to be shifted closer to the rail.*

This is our layout for a **5FIN** on a kneeboard. It is identical to the standard QUAD layout but with the addition of a center box. This should be considered a starting point for your own designs. **Cant angles** – FRONT 8° and BACK 4° boxes. Because of the amount of adjustment in the **GB24** boxes the placement can be altered by as much as 3/4" / 9.5mm., so consider incorporating this into the layout.

copyright© 2023 Mair Designs LLC All Rights Reserved

Shop 8, 190-192 The Entrance Road,
Long Jetty, NSW Australia
+61 2 4339 9580

PO Box 424
Hanalei, HI 96714
+1 808 639 5303

info@gearbox.surf gearbox.surf

DESIGN	**GB24 Kneeboard 5FIN Layout**		
DESCRIPTION	Current 5FIN layout for a typical kneeboard		
DESIGNER	Robin Mair	SCALE	No Scale
DATE	2023-12-09	REVISION	5